UNIT-I

Introduction to Electronics

Difference between active & Passive components

Sr. No.	Active Components	Passive Components
1	Active devices inject power/energy to the circuit	Passive devices are incapable of supplying any power/energy
2	Active devices are capable of providing power gain	Passive devices do not provide power gain.
3	Active devices can control the current flow within the circuit. i.e. current is unidirectional in active components	Passive device cannot control current i.e. current is bidirectional in passive components
4	An external power (biasing) is required to start basic operation of an active device	No extra external power (biasing) is used for passive device
5	Examples of Active devices are: Transistor, FET, OPAMP	Examples of passive devices are: Resistor, capacitor, inductor

Active and passive components

PASSIVE

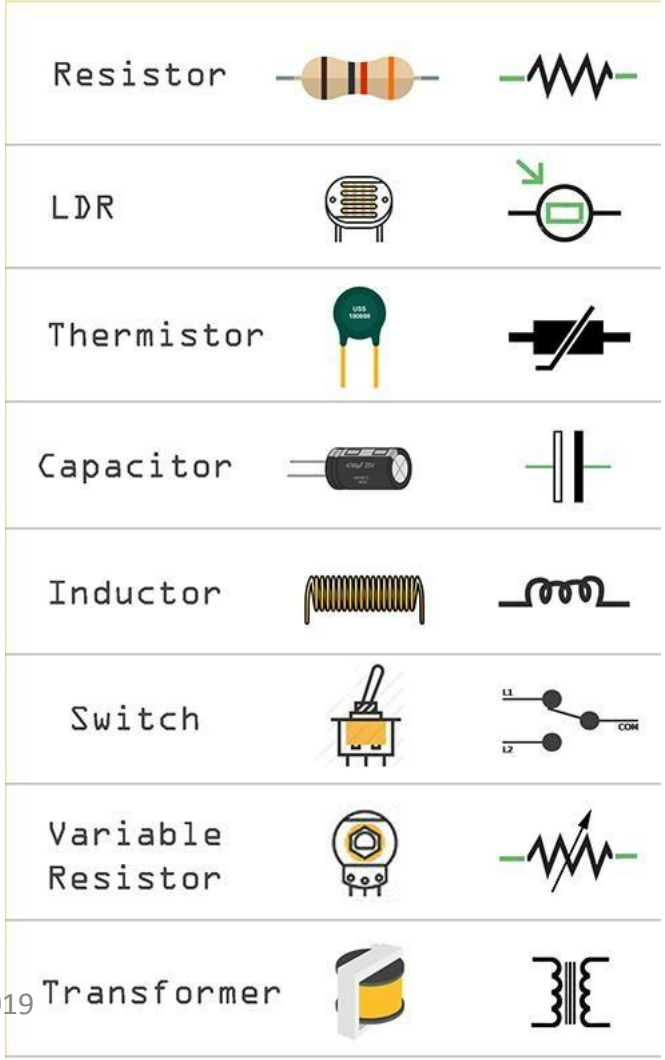

ACTIVE

Transistor

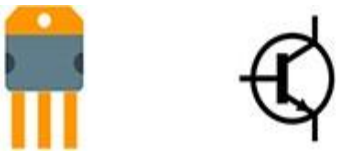

BJT,
JFET,MOSFET

Operational Amplifier

Insulators, Conductors and Semi-conductors

- ***Insulators :*** An **insulator** is a material that does not conduct electrical current under normal conditions. Most good insulators are compounds rather than single-element materials and have very high resistivity. Valence electrons are tightly bound to the atoms; therefore, there are very few free electrons in an insulator. **Examples** of insulators are **rubber, plastics, glass, mica, and quartz**.
- ***Conductors:*** A **conductor** is a material that easily conducts electrical current. Most metals are good conductors. The best conductors are single-element materials, such as **copper (Cu), silver (Ag), gold (Au), and aluminum (Al),** which are characterized by atoms with only one valence electron very loosely bound to the atom. These loosely bound valence electrons become free electrons. Therefore, in a conductive material the **free electrons** are valence electrons.
- ***Semiconductors:*** A **semiconductor** is a material that is between conductors and insulators in its ability to conduct electrical current. A semiconductor in its pure (intrinsic) state is neither a good conductor nor a good insulator. Single-element semiconductors are silicon (Si) and germanium (Ge). Compound semiconductors such as gallium arsenide and indium phosphide are also commonly used. The single-element semiconductors are characterized by atoms with four valence electrons.

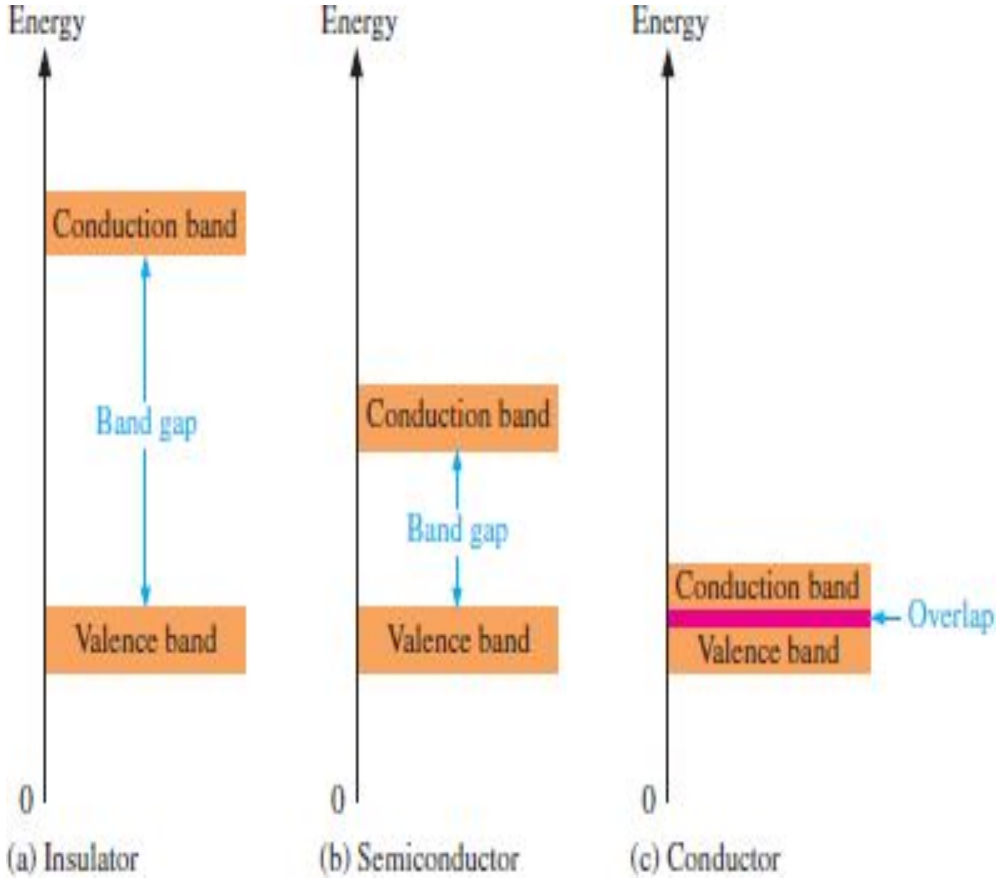

- For insulators, the energy gap is huge and can be crossed only when breakdown condition occurs - as when a very high voltage is applied across the material.

- In semiconductors the energy band gap is smaller, allowing an electron in the valence band to jump into the conduction band if it absorbs energy.

- In conductors, the conduction band and valence band overlap, so there is no gap, as shown in Figure. This means that electrons in the valence band move freely into the conduction band, so there are always electrons available as free electrons.

Introduction to semiconductor physics

PARAMETER	CONDUCTOR	SEMI CONDUCTOR	INSULATOR
No. of valance electrons	3 or less than 3	4	5 or more than 5
conductivity	high	medium	negligible

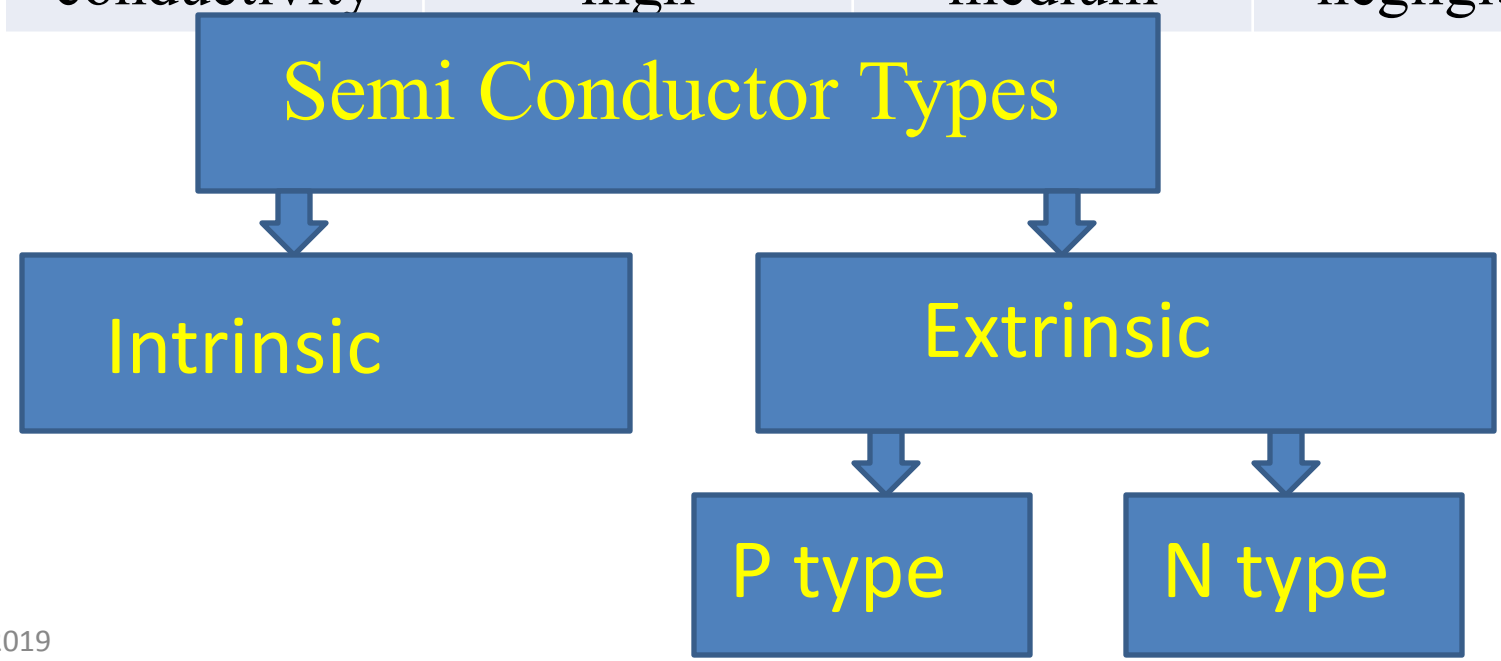

Semi-conductor types

Intrinsic Semi-Conductor → Dopping → Extrinsic Semi-Conductor

Intrinsic Semi-Conductor → Trivalent Impurity → P Type Semi-Conductor

Intrinsic Semi-Conductor → Pentavalent Impurity → N Type Semi-Conductor

N type semi-conductor

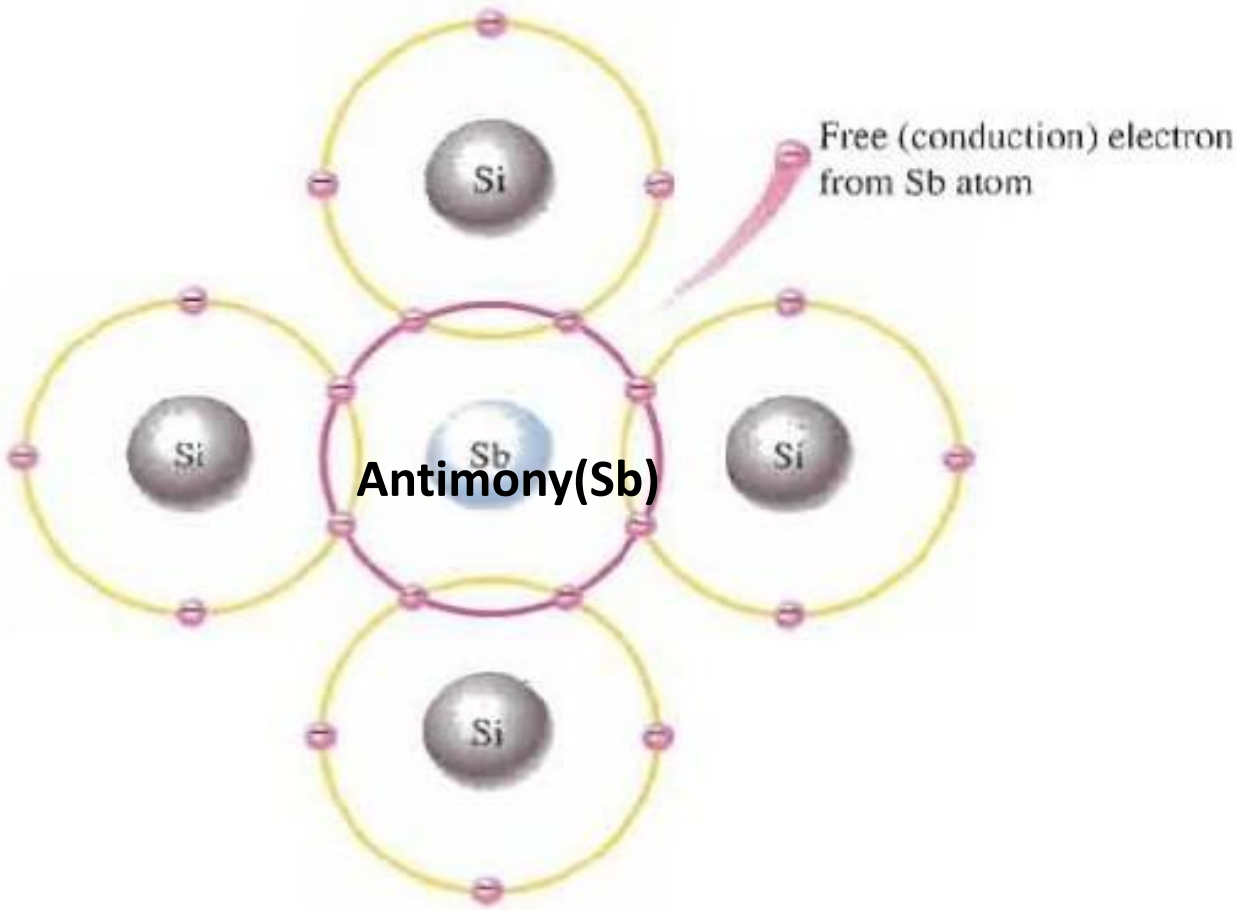

Pentavalent impurity atom in a silicon crystal structure. An antimony (Sb) impurity atom is shown in the center. The extra electron from the Sb atom becomes a free electron. Pentavalent (Donor) impurity

- To increase the number of conduction-band electrons in intrinsic silicon, **pentavalent** impurity atoms are added.
- These are atoms with five valence electrons such as arsenic (As), phosphorus (P), bismuth (Bi), and antimony (Sb).
- As illustrated in Figure, each pentavalent atom (antimony (Sb), in this case) forms covalent bonds with four adjacent silicon atoms.
- Four of the antimony atom's valence electrons are used to form the covalent bonds with silicon atoms, leaving one extra electron.
- This extra electron becomes a conduction electron because it is not involved in bonding.
- Because the pentavalent atom gives up an electron, it is often called a *donor atom.*
- The number of conduction electrons can be carefully controlled by the number of impurity atoms added to the silicon.

P type semi-conductor

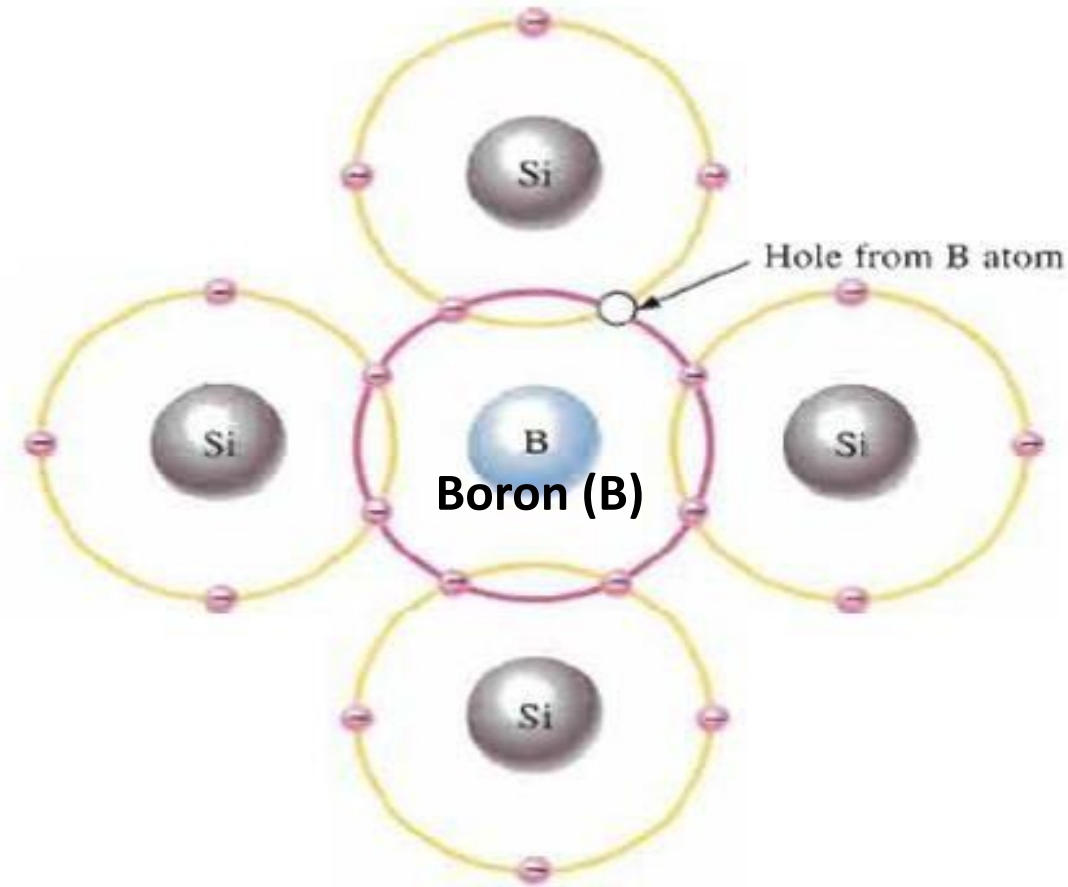

Trivalent impurity atom in a silicon crystal structure. A boron (B) impurity atom is shown in the center. Trivalent (Acceptor) impurity

- To increase the number of holes in intrinsic silicon, **trivalent** impurity atoms are added.
- These are atoms with three valence electrons such as boron (B), indium (In), and gallium (Ga).
- As illustrated in Figure, each trivalent atom (boron, in this case) forms covalent bonds with four adjacent silicon atoms.
- All three valence electrons of Boron are used in the covalent bonds; and, since four electrons are required, a hole is created when each trivalent atom is added.
- Because the trivalent atom can take an electron, it is often referred to as an *acceptor atom.*
- The number of holes can be carefully controlled by

P-N Junction (Diode) and Formation of Depletion Region

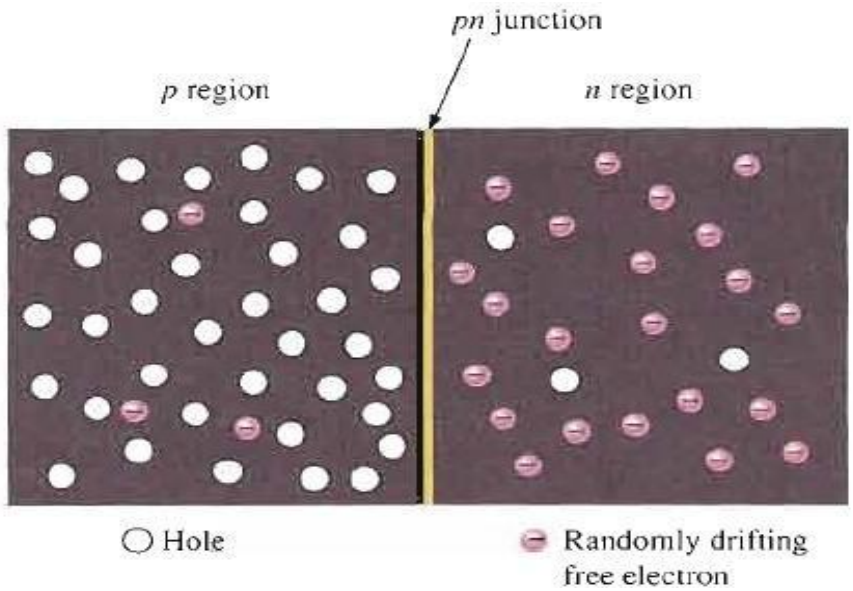

Figure 1: The basic silicon structure at the instant of junction formation showing the majority and minority carriers.

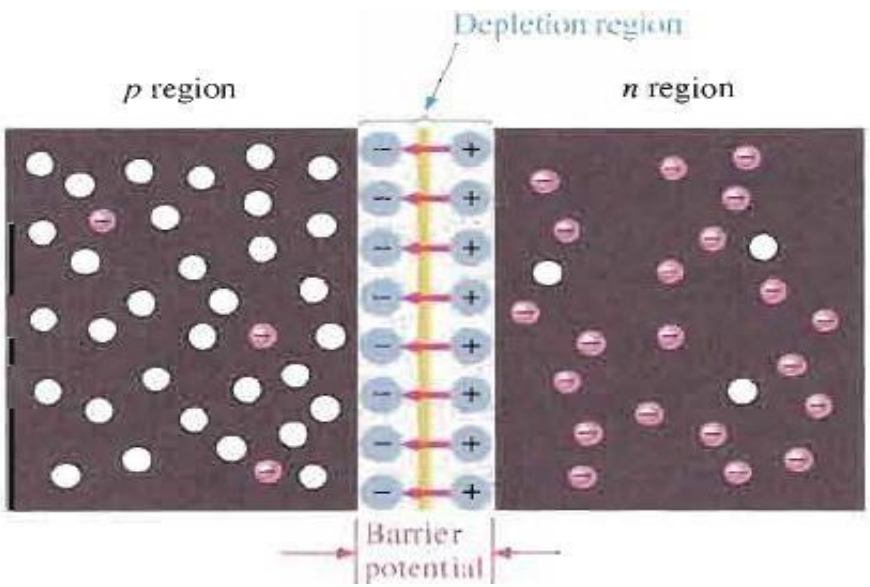

Figure 2: Formation of Depletion Region

- **p-n junction Diode:**
- If a piece of intrinsic silicon is doped so that part is *n*-type and the other part is *p*-type, a **p-n junction** forms at the boundary between the two regions and a diode is created, as indicated in **Figure 1**.
- The ***p* region** has many holes (majority carriers) from the impurity atoms and only a few thermally generated free electrons (minority carriers).
- The ***n* region** has many free electrons (majority carriers) from the impurity atoms and only a few thermally generated holes (minority carriers).
- **Formation of the Depletion Region & Barrier Potential:**
- For every electron that diffuses across the junction and combines with a hole, a positive charge is left in the *n* region and a negative charge is created in the *p* region, forming a ***barrier potential***.
- This action continues until the voltage of the barrier repels further diffusion.
- In **Figure 2**, positive and negative charges in the depletion region represent the electric field (**Barrier Potential**).
- For **Silicon (Si)** barrier potential is **0.7V** and for **Germanium (Ge)** it is **0.3V**

Forward biased Diode Working

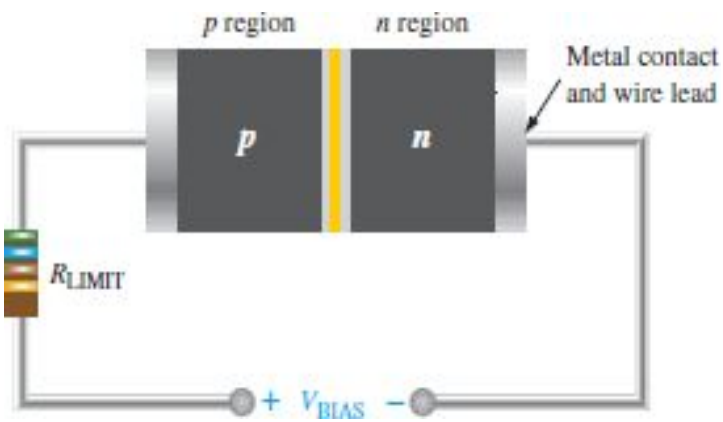

Figure 1: A diode connected in forward bias.

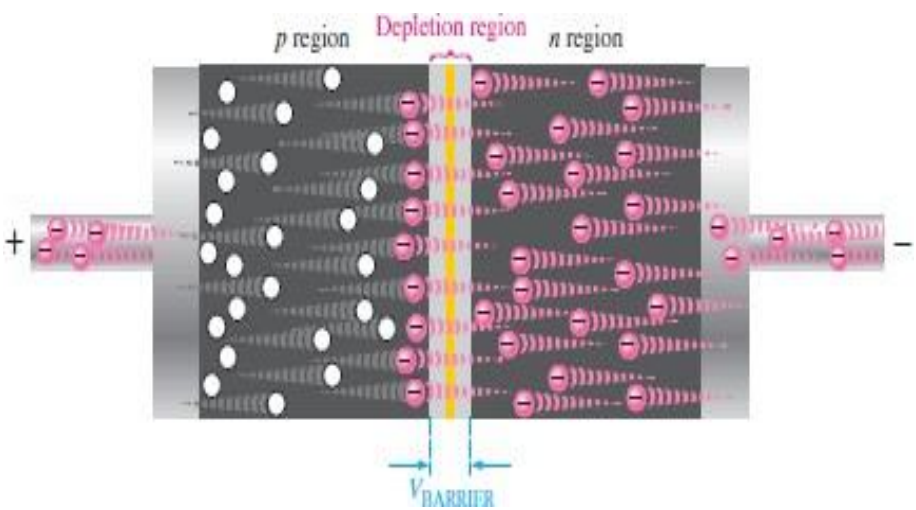

Figure 2: A forward-biased diode showing the flow of majority carriers and the voltage due to the barrier potential across the depletion region.

- As the **negative side of *V*BIAS** is connected to the ***n* region** of the diode and the **positive side** is connected to the ***p* region**, the diode is **forward biased.(Figure 1)**
- **Forward bias** is the condition that allows current through the *p-n* junction.
- Current flows through diode when *V*BIAS is greater than the **barrier potential.**
- Because like charges repel, the negative side of the bias-voltage source "pushes" the free electrons (majority carriers) in the *n* region, toward the *p-n* junction. This flow of free electrons is called ***electron current.*** **(Figure 2)**
- Since unlike charges attract, the positive side of the bias-voltage source attracts the valence electrons toward the left end of the *p* region.
- The holes in the *p* region provide the medium or "pathway" for these valence electrons to move through the *p* region.
- The valence electrons move from one hole to the next toward the left. The holes (majority carriers) in the *p* region, effectively (not actually) move to the right toward the junction. This effective flow of holes is the **hole current**.

Voltage – Current(V-I) Characteristics of diode in Forward bias

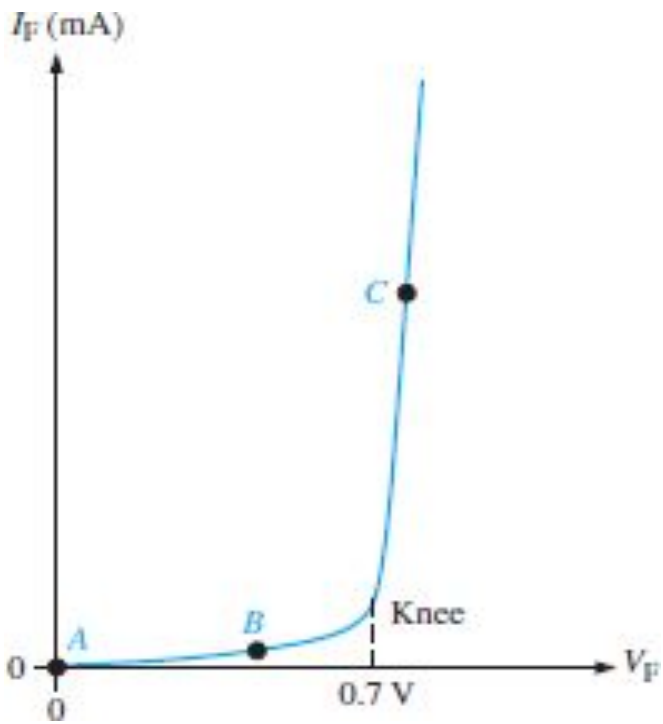

- When a forward-bias voltage is applied across a diode, there is current. This current is called the *forward current* and is designated as I_F and the voltage across diode is forward voltage V_F

- As forward-bias voltage is increased from 0 V gradually, the forward current *and* the voltage across the diode gradually increase as show in Fig.

- When forward-bias voltage equals barrier potential (0.7V), the forward current begins to increase rapidly but the voltage across the diode increases only gradually above 0.7 V as illustrated in Figure.

Reverse biased Diode Working

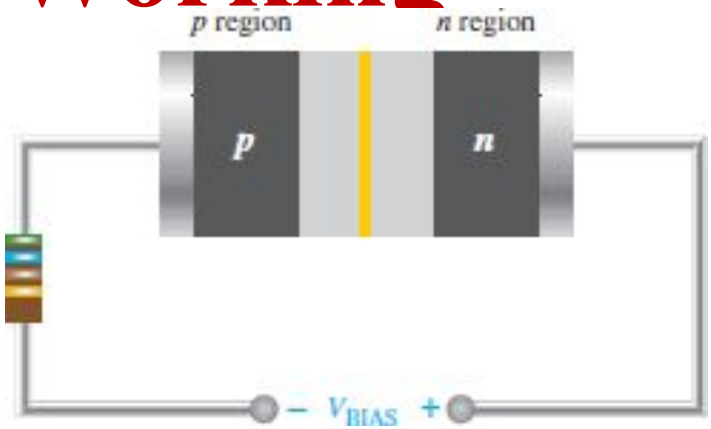

Figure 1: A diode connected for reverse bias.

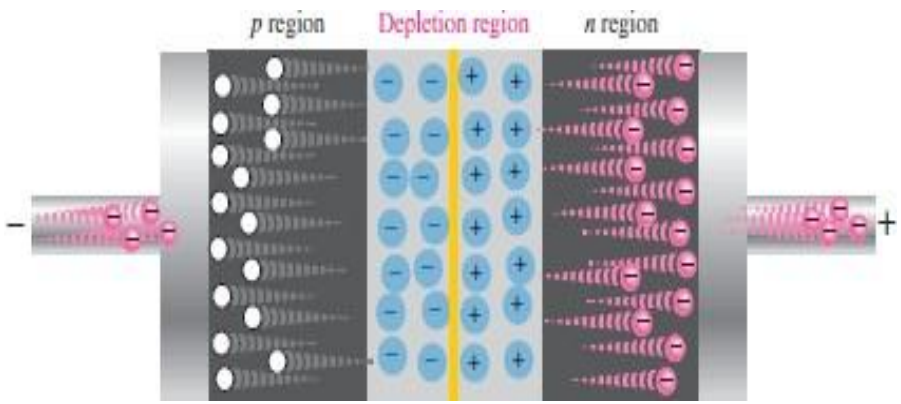

Figure 2: In Reverse bias depletion region width increases.

- As the positive side of *V*BIAS is connected to the ***n* region** of the diode and the **negative side** is connected to the ***p* region,** diode is **reverse biased.**
- In **Reverse bias** condition ideally no current flows through the diode.
- The positive side of the bias-voltage source "pulls" the free electrons (majority carriers) in the *n* region creating additional negative ions. This results in a widening of the depletion region.
- In the *p* region, electrons from the negative side of the voltage source enter as valence electrons and move from hole to hole toward the depletion region where they create additional negative ions. This results in a widening of the depletion region
- As the depletion region widens, the availability of majority carriers decreases and there is no current through diode except reverse saturation current due to thermally generated minority carriers

V-I Characteristics of diode in Forward bias

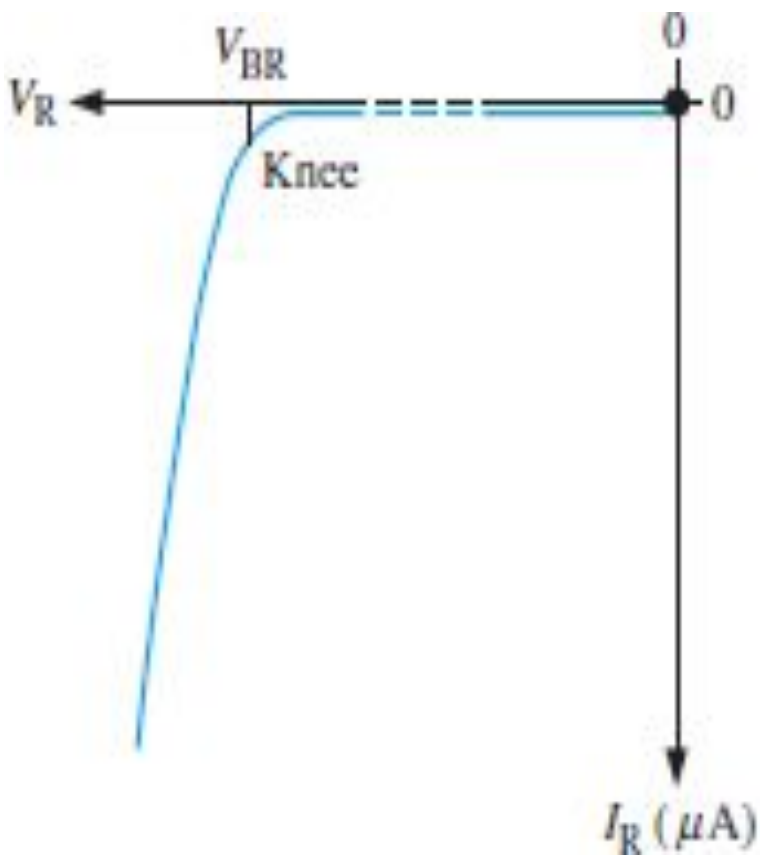

- When a reverse-bias voltage is applied across a diode, there is only an **extremely small** reverse saturation current (I_R) through the *p-n* junction.
- As you gradually increase the reverse-bias voltage, there is a very small reverse current and the voltage across the diode increases as shown in figure.
- When the applied bias voltage is increased to a value where the reverse voltage across the diode (V_R) reaches the breakdown value (V_{BR}), the reverse current begins to increase rapidly but reverse voltage remains constant.

Combined Voltage Current (V-I) Characteristic for diode

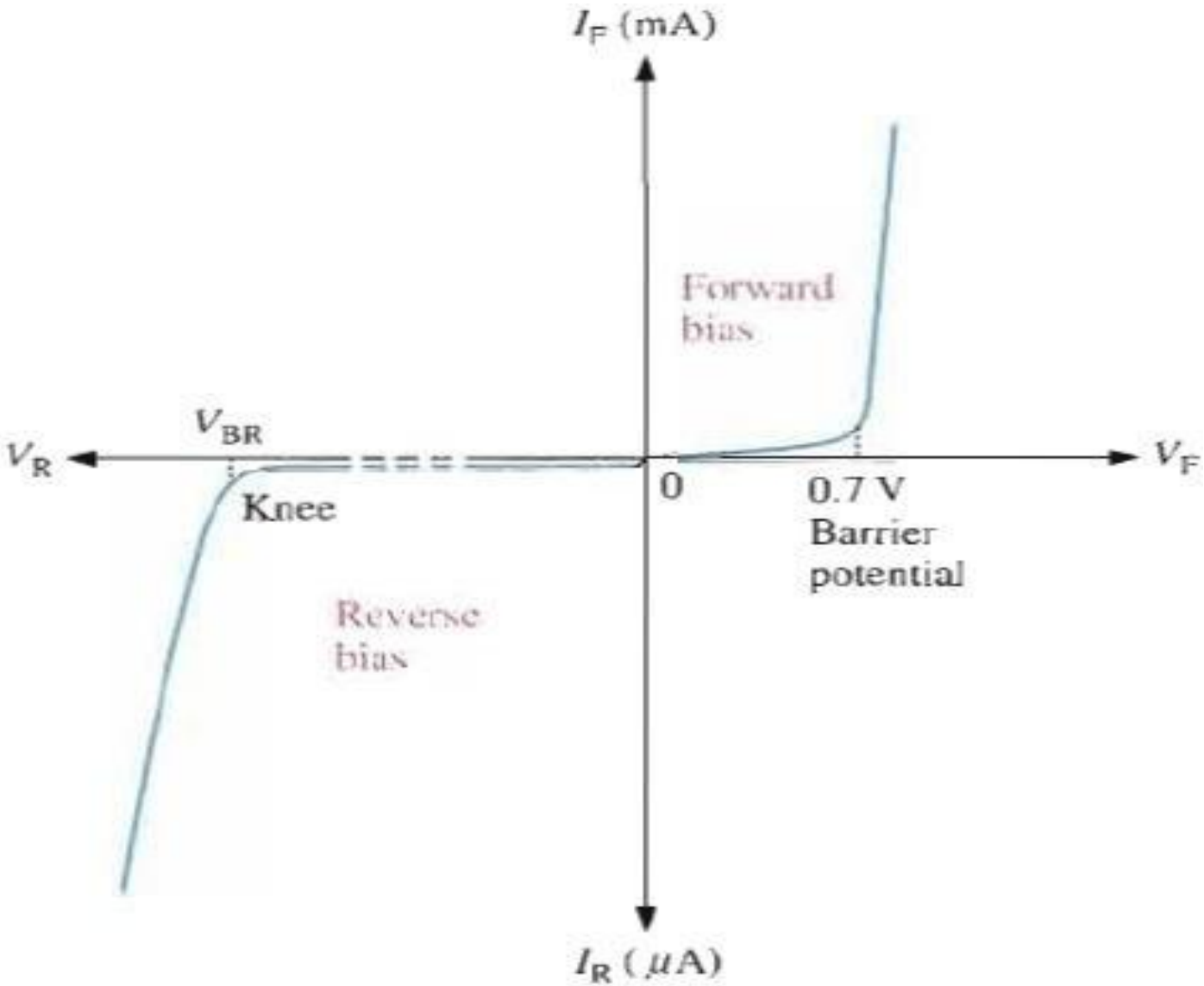

Diode as a Switch

(a) Forward biased diode

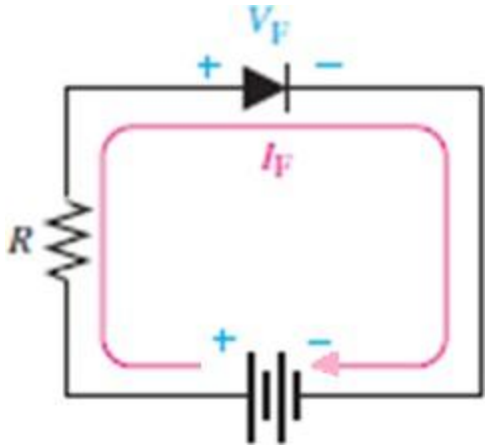

(b) Closed Switch

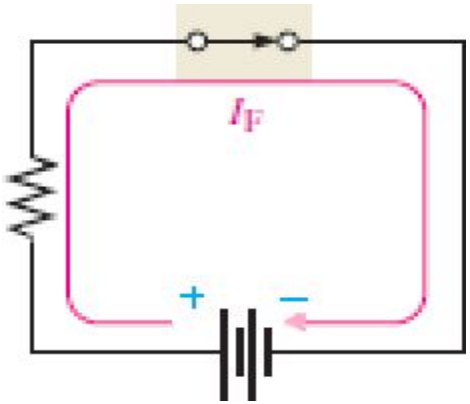

Figure 1: Diode acts as a closed switch when it is forward biased

(a) Reverse biased diode

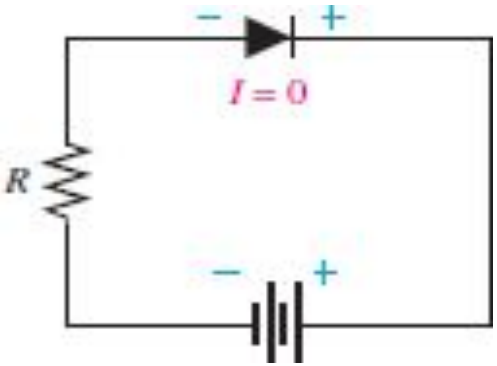

(b) Open Switch

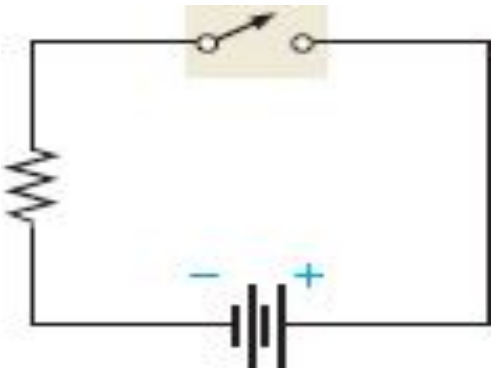

Figure 1: Diode acts as a open switch when it is reverse biased

Closed Switch:

- As positive terminal of the source is connected to anode and negative terminal is connected to the cathode the diode is forward biased as shown in Fig1(a)
- As diode is forward biased forward current I_F flows through the circuit and forward voltage drop is V_F due to barrier potential.
- As diode conducts current it acts as closed switch in forward bias as shown in Fig1(b)

Open Switch:

- As negative terminal of the source is connected to anode and positive terminal is connected to the cathode the diode is reverse biased as shown in Fig2(a)
- As diode is reverse biased there is no current except very small reverse saturation current I_R through the circuit and whole source voltage appears across diode.
- As diode does not conduct current it acts as open switch in reverse bias as shown in Fig2(b)

Ideal diode V-I Characteristics when diode acts as a switch

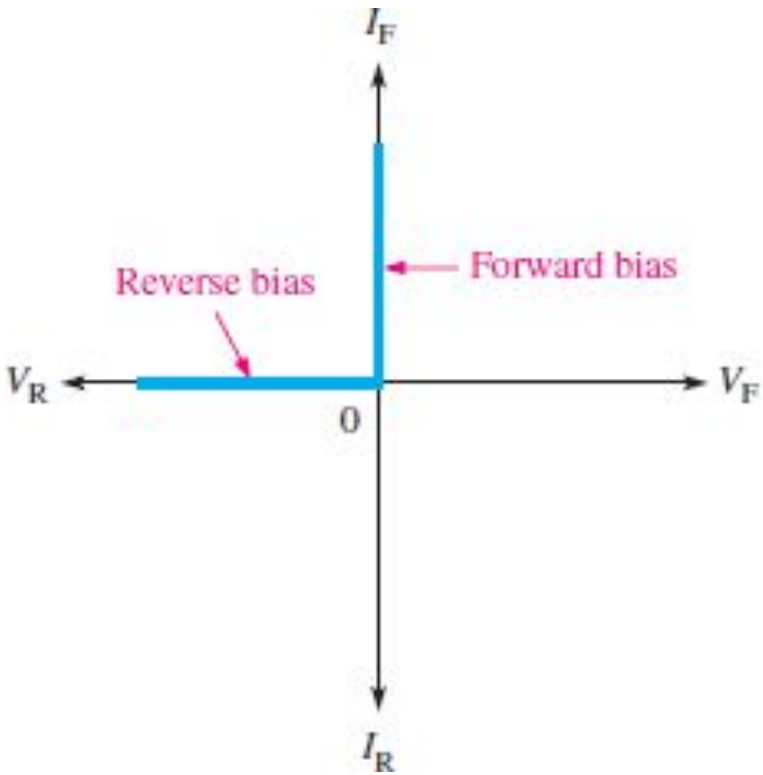

- When the diode is forward-biased, it ideally acts like a closed (on) switch.
- Forward current increases rapidly and ideally voltage drop across diode is zero.
- When the diode is reverse-biased, it ideally acts like an open (off) switch.
- Reverse voltage is equal to bias voltage and reverse saturation current is neglected ideally, hence current is zero.

Diode as Rectifier

- It is a circuit which converts AC into pulsating DC

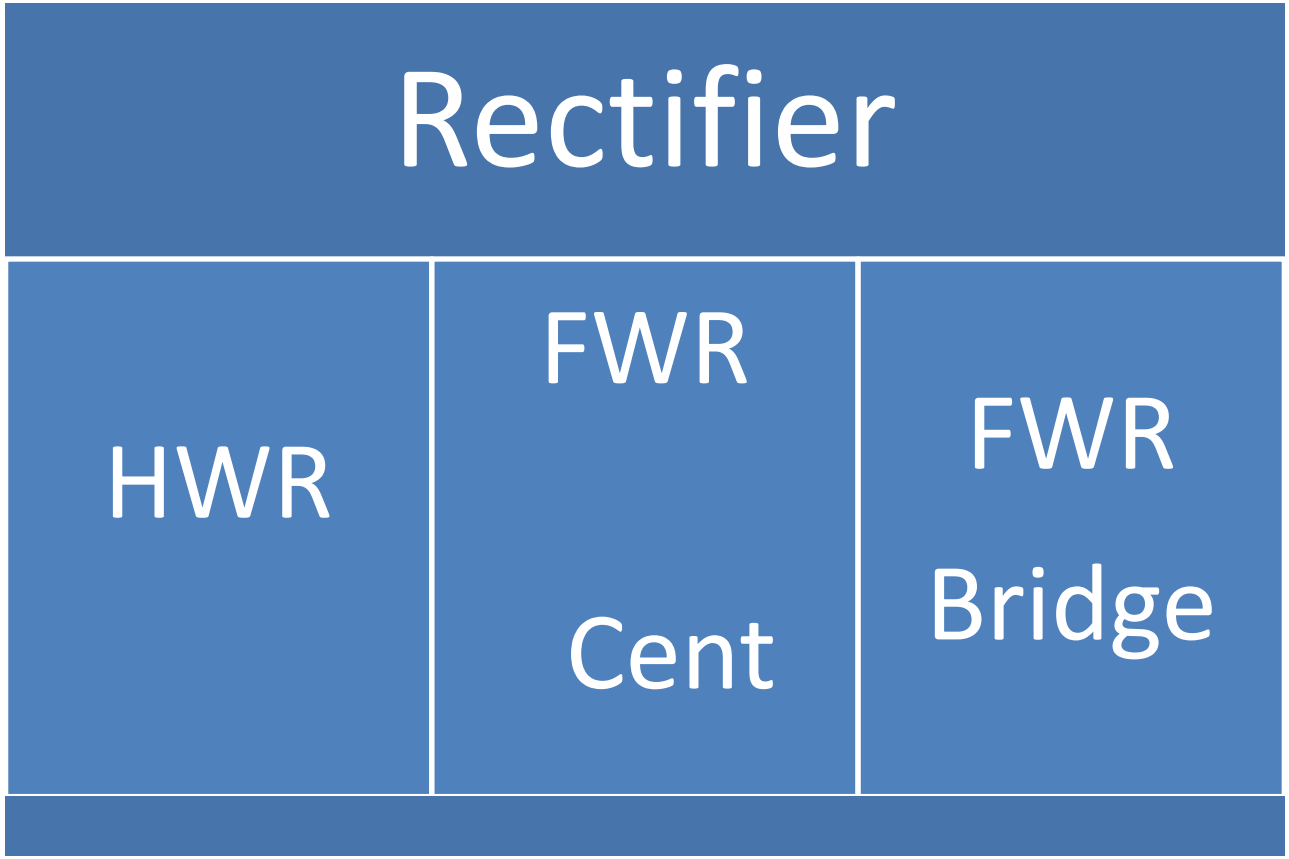

Half Wave Rectifier (HWR)

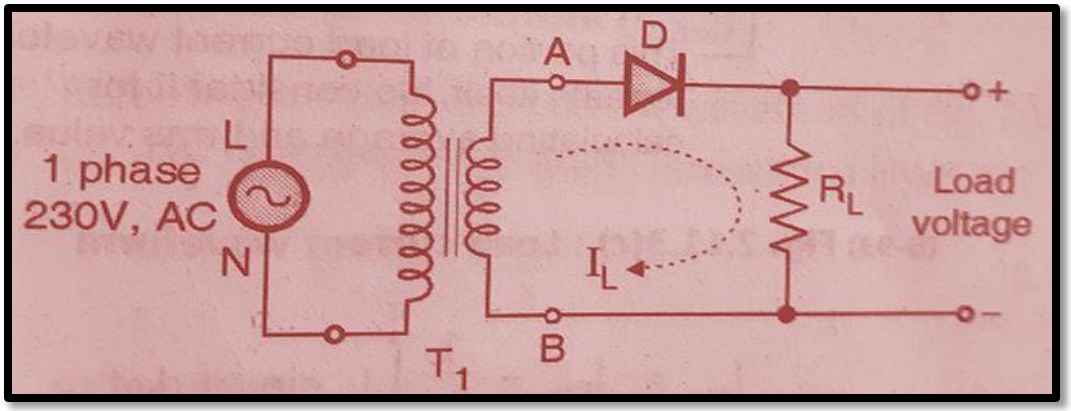

Figure 1: Half Wave Rectifier Circuit

Figure 2: HWR operation in positive half cycle

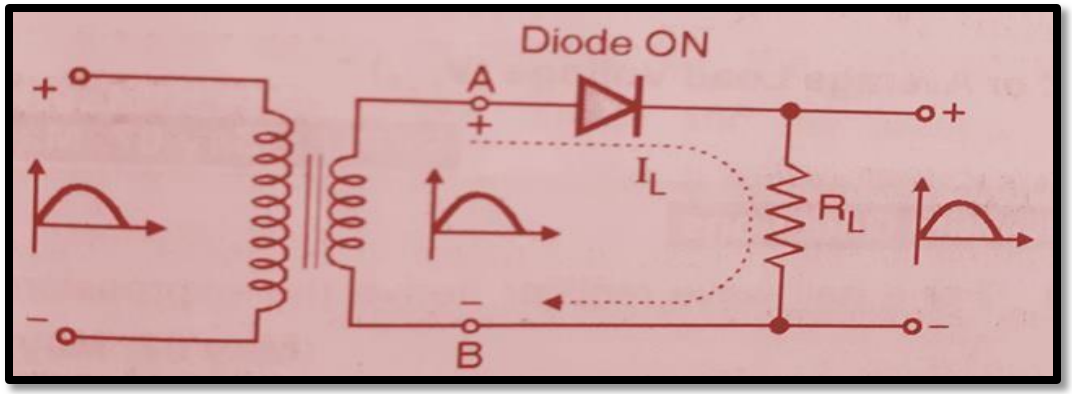

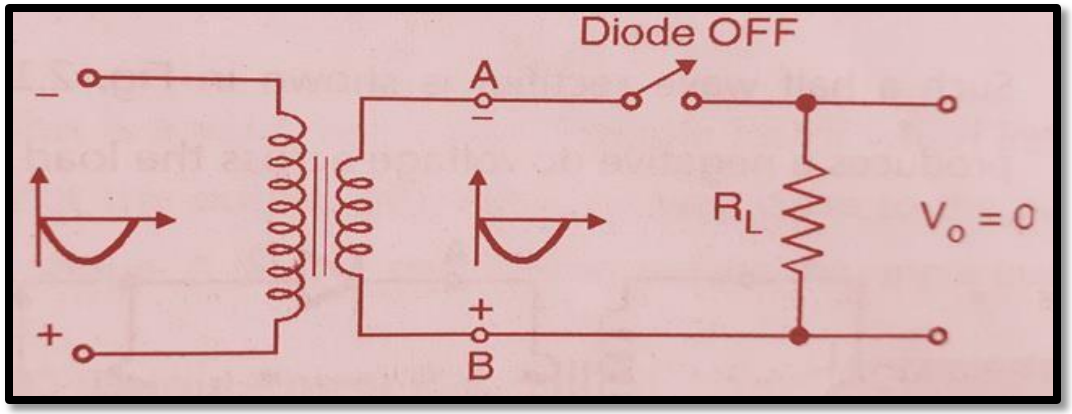

Figure 3: HWR operation in negative half cycle

- Half wave rectifier circuit is a rectifier circuit that delivers power to the load during only one half cycle (either positive or negative) of ac supply voltage
- HWR circuit is as shown in Fig. 1 Diode D1 is connected to input step down transformer T1 and load resistor RL.

Operation in Positive Half Cycle:

- In positive half cycle (0 - π) the secondary voltage $V_{AB}$is positive i.e. A is positive with respect to B as shown in Fig.2.
- As anode is connected to positive and cathode is connected to negative terminal diode is forward biased and starts conducting current.
- The load voltage is almost equal to the instantaneous secondary voltage V_{AB} and load current has the same shape as load voltage as shown in Fig.4 waveforms.

Operation in Negative Half Cycle:

- In negative half cycle (π- 2π) the secondary voltage $V_{AB}$is negative i.e. A is negative with respect to B as shown in Fig.3.
- As anode is connected to negative and cathode is connected to positive terminal diode is reverse biased and acts as an open switch.
- The load is disconnected from the secondary hence load voltage and load current both are zero as shown in Fig.4 waveforms.

Figure 4: Output waveforms for HWR

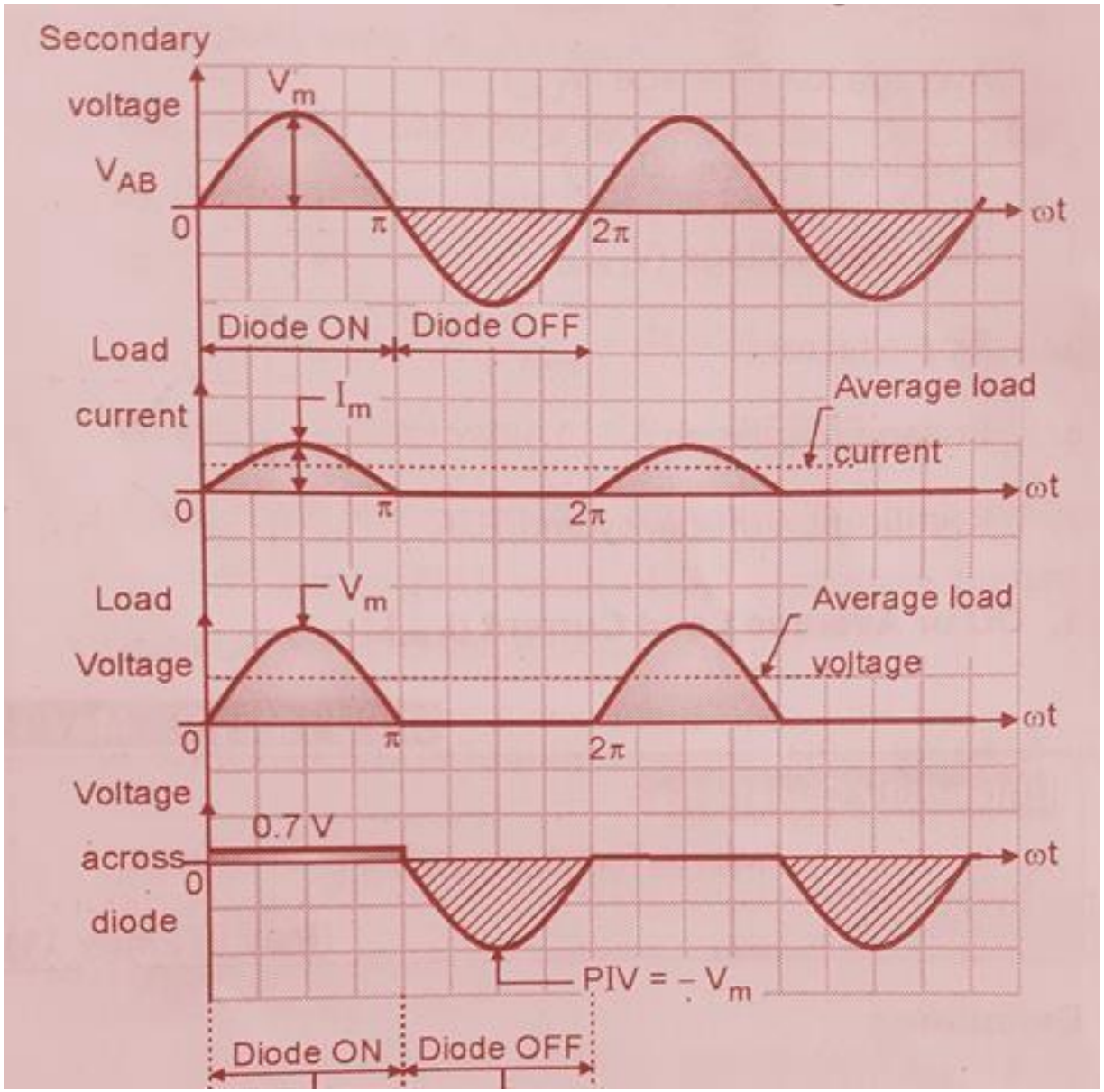

Center Tapped –Full Wave Rectifier

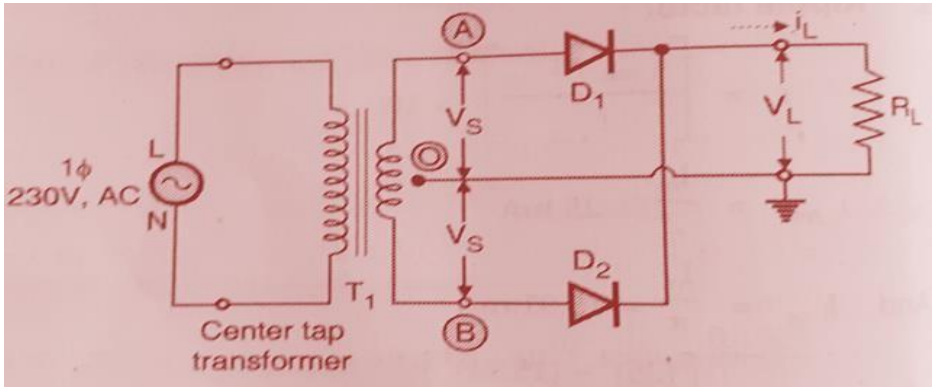

Figure 1: Center tapped Full Wave Rectifier Circuit

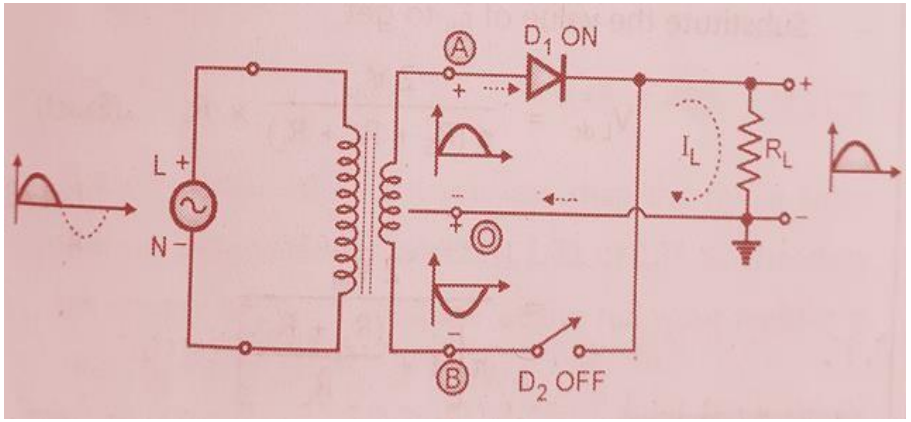

Figure 2: Center tapped FWR operation in positive half cycle

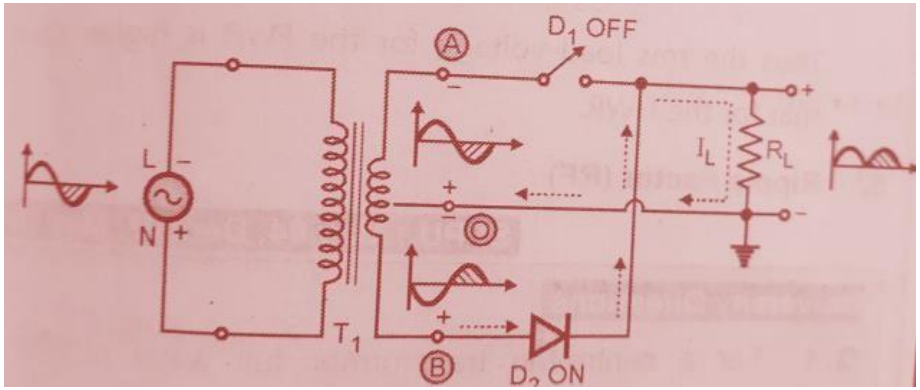

Figure 3: Center tapped FWR operation in negative half cycle

- Full wave rectifier circuit is a rectifier circuit that delivers power to the load during both half cycle (positive as well as negative) of ac supply voltage
- FWR circuit is as shown in Fig. 1 Diodes D1 and D2 are connected to center tapped step down transformer and load resistor RL.
- The induced voltages in two half of secondary winding are 180^0 out of phase i.e. V_{AO} and V_{BO} are equal but opposite in sign.

Operation in Positive Half Cycle:

- In positive half cycle (0 - π) the secondary voltage $V_{AO}$is positive and V_{BO} is negative
- Hence diode D1 is forward biased (closed switch) and D2 is reverse biased (open switch). The load current starts flowing from A, through diode D1, load resistance RL and back to point O as shown in Fig.2
- The load voltage is almost equal to the instantaneous voltage V_{AO} and load current has the same shape as load voltage as shown in Fig.4 waveforms.

Operation in Negative Half Cycle:

- In negative half cycle (π-2π), voltage $V_{AO}$is negative and V_{BO} is positive
- Hence diode D1 is reverse biased (open switch) and D2 is forward biased (closed switch). The load current starts flowing from B, through diode D2, load resistance RL and back to point O as shown in Fig.3. Load current has same direction as in positive half cycle.
- The load voltage is almost equal to the instantaneous voltage V_{BO} and load current has the same shape as load voltage as shown in Fig.4 waveforms.
- As output is present in both the half cycles of ac power supply hence FWR.

Figure 4: Center Tapped –Full Wave Rectifier Waveforms

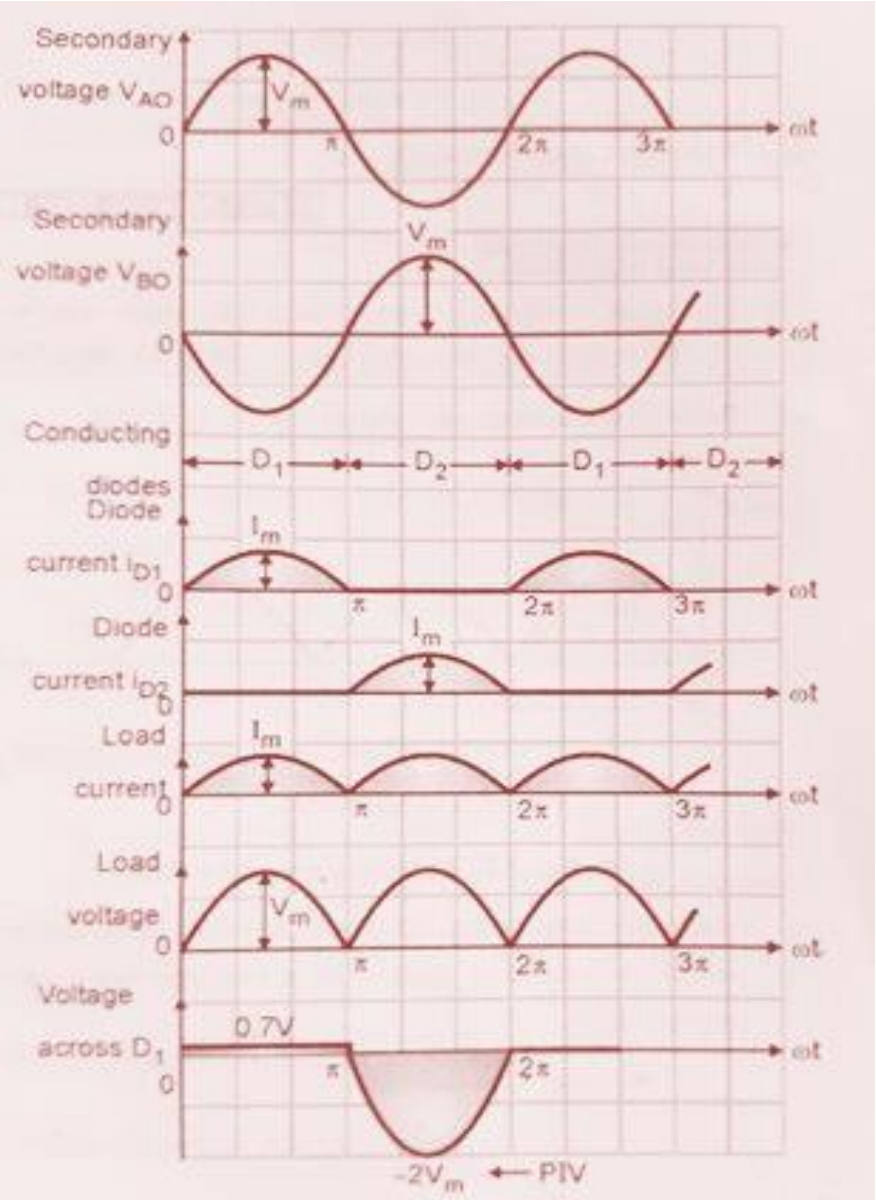

Working of Bridge Rectifier

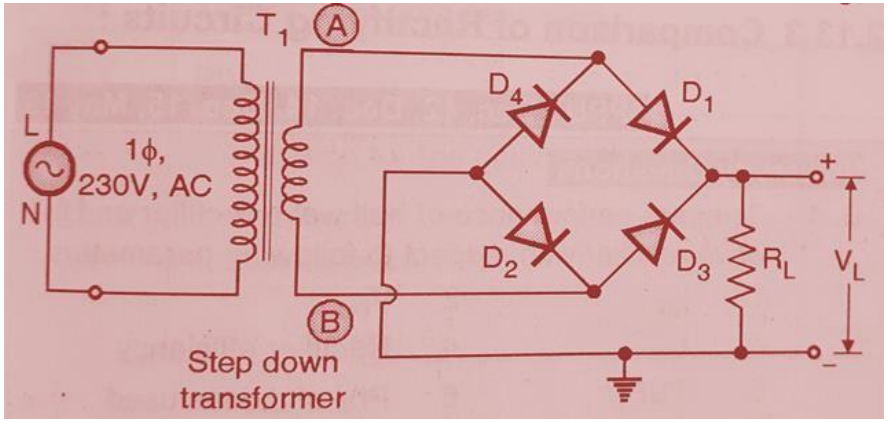

Figure 1: Bridge (Full Wave) Rectifier Circuit

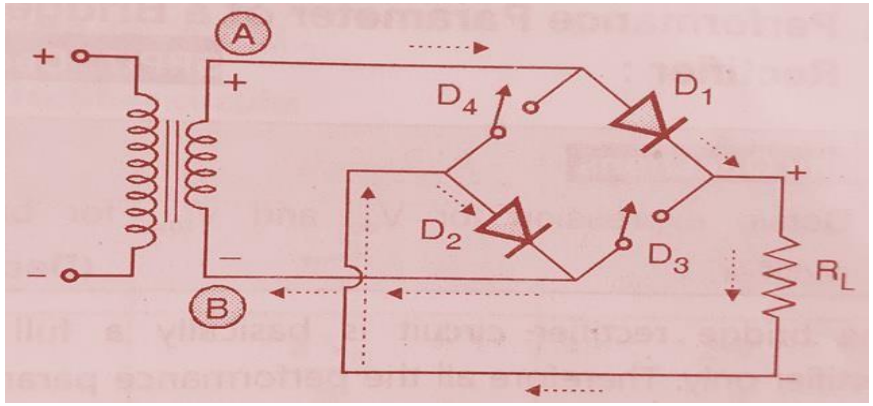

Figure 2: Bridge (FWR) operation in positive half cycle

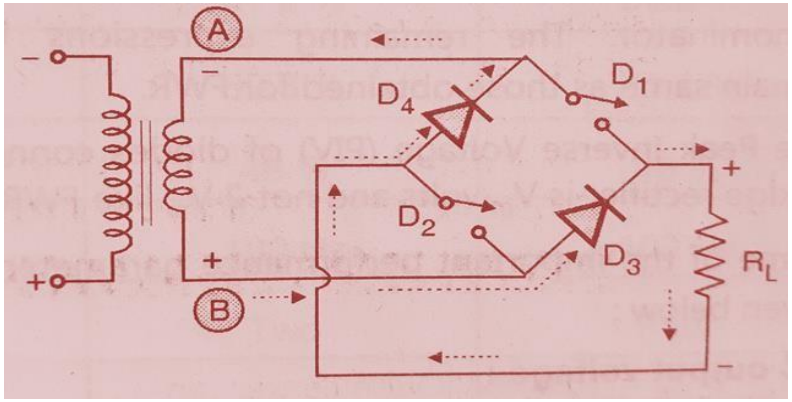

Figure 3: Bridge (FWR) operation in negative half cycle

- Bridge rectifier is a FWR circuit that contains four diodes to form a bridge as shown in Figure 1 and delivers power to the load in both half cycles (positive and negative) of ac supply.
- Diodes conduct in pairs i.e. in positive half cycle D1-D2 and in negative half cycle D3 –D4 will conduct.

Operation in Positive Half Cycle:

- In positive half cycle (0 - π) the secondary voltage $V_{AB}$is positive
- Hence diodes D1 and D2 are forward biased (act as closed switches) and D3 and D4 are reverse biased (act as open switches) as shown in Fig2. The load current starts flowing from A, through diode D1 and D2, load resistance RL and back to point B as shown in Fig.2
- The load voltage is almost equal to the instantaneous voltage V_{AB} and load current has the same shape as load voltage as shown in Fig.4 waveforms.

Operation in Negative Half Cycle:

- In negative half cycle (π-2π), the secondary voltage $V_{AB}$is negative
- Hence diodes D1 and D2 are reverse biased (act as open switches) and D3 and D4 are forward biased (act as closed switches) as shown in Fig3. The load current starts flowing from A, through diode D3 and D4, load resistance RL and back to point B as shown in Fig.2
- The load voltage is almost equal to the instantaneous voltage V_{AB} and load current has the same shape as load voltage as shown in Fig.4 waveforms.
- As output is present in both the half cycles of ac power supply hence FWR.

Figure 4:Bridge Rectifier Waveforms

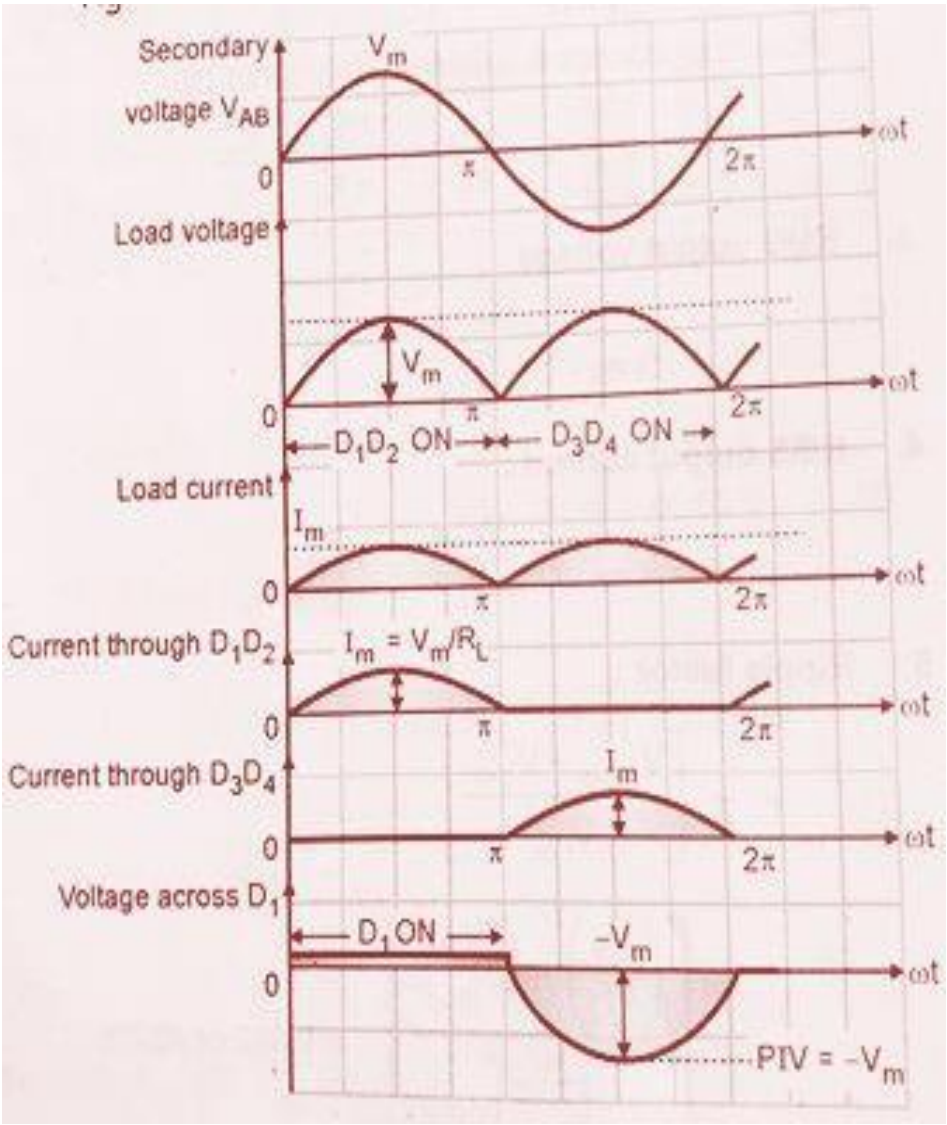

Comparison of HWR and FWR

Property	Half-Wave Rectifier	Full Wave Rectifier	
		Center-Tapped FWR	Bridge type FWR
Number of Diodes	one	Two	Four
Secondary Voltage	V_m	$2V_m$	V_m
waveform		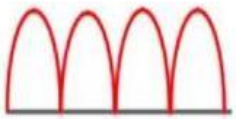	
DC output	$\frac{V_m}{\pi}$	$\frac{2V_m}{\pi}$	$\frac{2V_m}{\pi}$
Ripple Factor	1.21	0.482	0.482
Rectification Efficiency	40.6%	81.2%	81.2%
Transformer Utilization Factor	0.287	0.692	0.811
Peak Inverse Voltage	V_m	$2V_m$	V_m
AC output	$\frac{V_m}{2}$	$\frac{V_m}{\sqrt{2}}$	$\frac{V_m}{\sqrt{2}}$

Zener diode symbol, biasing and V-I characteristics

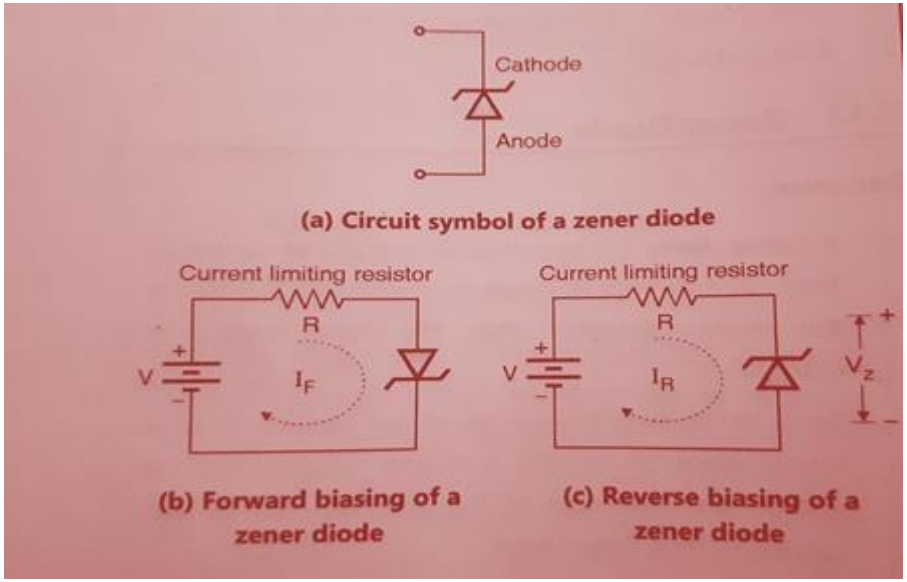

- Forward biased zener diode behaves identical to a forward biased p-n junction diode
- Zener diode in reverse biased condition is used as voltage regulator

- Forward characteristics of zener diode is almost identical to a forward biased p-n junction diode
- As we increase reverse voltage, initially a small reverse saturation current I_0 in μA will flow
- At a certain value of reverse voltage, the reverse current will increase suddenly and sharply and breakdown occurs.
- This breakdown voltage is called zener voltage.
- After breakdown, the voltage across diode remains constant equal to Vz till Iz is b$^{9/}$e^{2}t^{3}w$^{/2}$e^{0}e^{19}n Izmin and Izmax

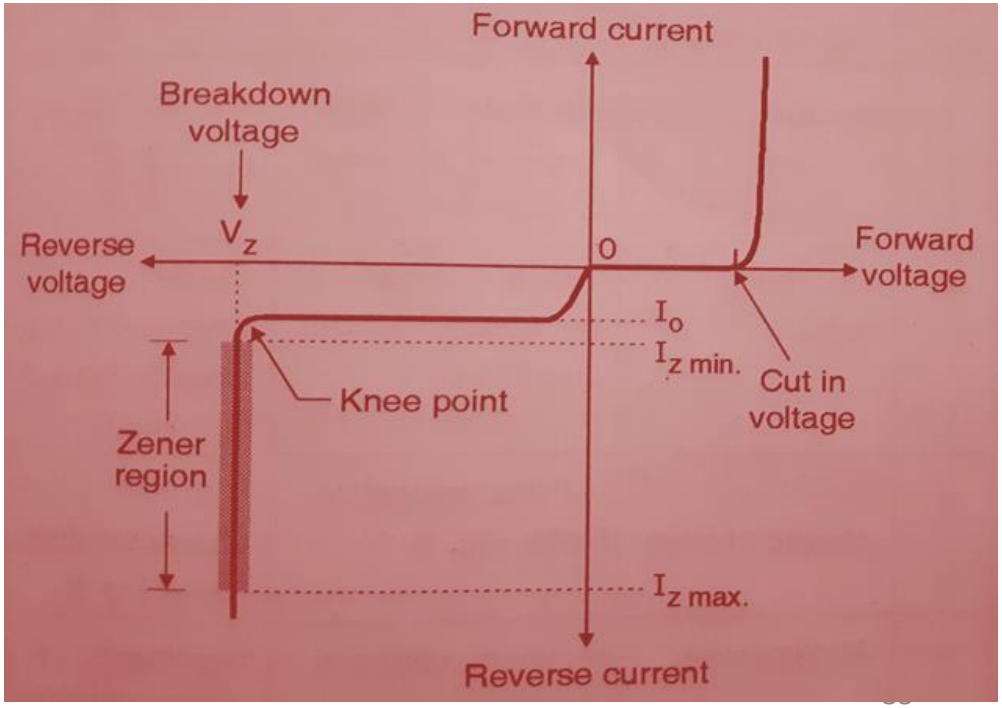

Zener diode as Voltage Regulator

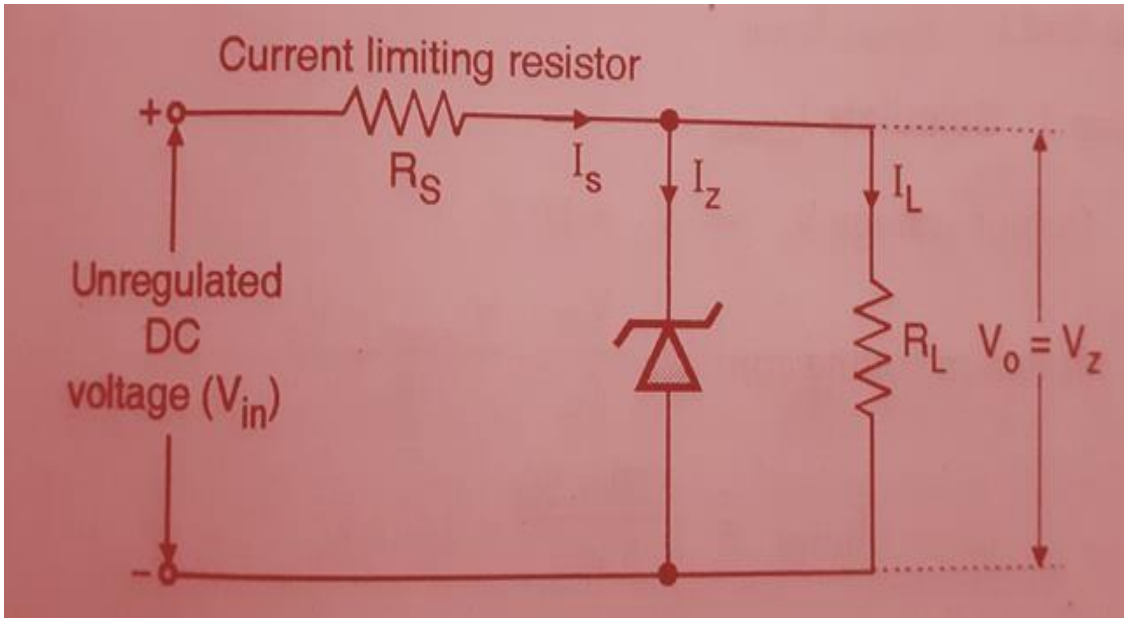

- Vin is unregulated DC supply voltage > Zener voltage Vz
- Rs is current limiting resistor
- RL is load resistor
- Is source current
- IL is load current

As Zener diode operates in Zener region, $V_0 = V_z$

Input Current $I_s = \frac{V_{in} - V_z}{R_s}$

Load Current $I_L = \frac{V_z}{R_L}$

Zener Current $I_s = I_z + I_L$

- If V_{in} is higher than V_z and if the zener current I_z is between I_{zmin} and I_{zmax} then the voltage across the zener will remain constant equal to V_z irrespective of any changes in V_{in} and I_L.
- **Regulating action with a Varying input voltage and constant I_L.**

If V_{in} increases

Then I_s increases

But I_L is constant as $I_L = \frac{V_z}{R_L}$

Hence I_z increases as $I_s = I_z + I_L$

If $I_z < I_{zmax}$ then zener operates in zener region and output voltage remains constant

If V_{in} decreases

Then I_s decreases

But I_L is constant as $I_L = \frac{V_z}{R_L}$

Hence I_z decreases as $I_s = I_z + I_L$

If $I_z > I_{zmin}$ then zener operates in zener region and output voltage remains constant

Regulating action with varying Load and input voltage constant

If R_L increases, I_L decreases

But I_s is constant as $I_s = I_z + I_L$

Hence I_z increases

If $I_z < I_{zmax}$ then zener operates in zener region and output voltage remains constant

If R_L decreases, I_L increases

But I_s is constant as $I_s = I_z + I_L$

Hence I_z decreases

If $I_z > I_{zmin}$ then zener operates in zener region and output voltage remains constant

Sr. No.	Zener Breakdown	Avalanche Breakdown
1	Zener diodes with breakdown voltages of **less than 5 V** operate in **Zener breakdown**.	Zener diodes with breakdown voltages **greater than 5 V** operate in **avalanche breakdown.**
2	The valence electrons are pulled into conduction band due to **very intense electric field appearing across narrow depletion region**. A large number of such free electrons will constitute a large reverse current and breakdown is said to have occurred due to Zener Breakdown	The valence electrons are pushed into conduction band due to **energy imparted by collision of electrons with atoms.** Newly generated free electrons will knock out more electrons. This is known as **carrier multiplication** and it is due to avalanche breakdown.
3	**V-I characteristics** with zener breakdown is **very sharp**.	**V-I characteristics** with avalanche breakdown **increases gradually**, it is not as sharp as that with the zener breakdown.
4	The zener breakdown voltage decreases with increase in temperature.	The avalanche breakdown voltage increases with increase in temperature.

Zener diode as voltage limiter

Figure 1

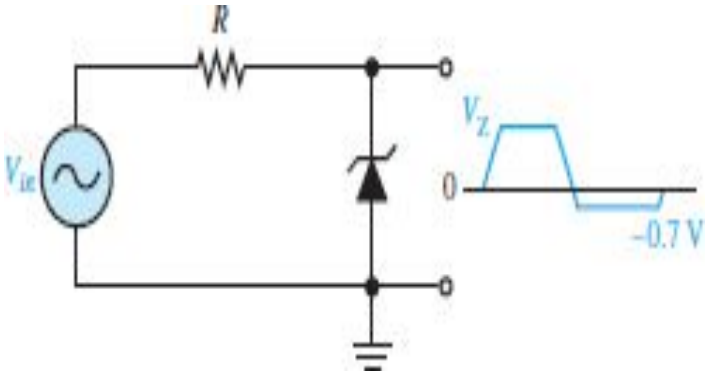

Figure 2

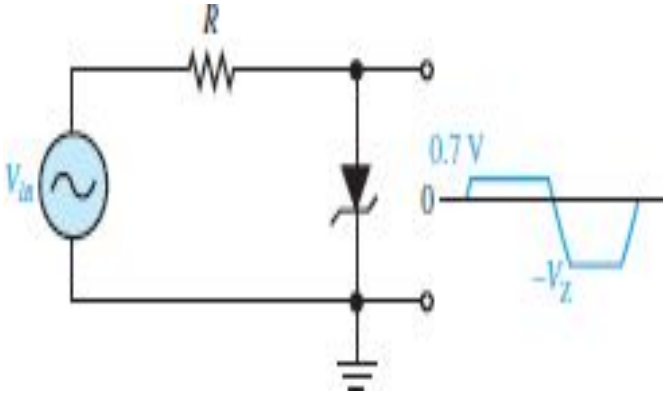

Figure 3

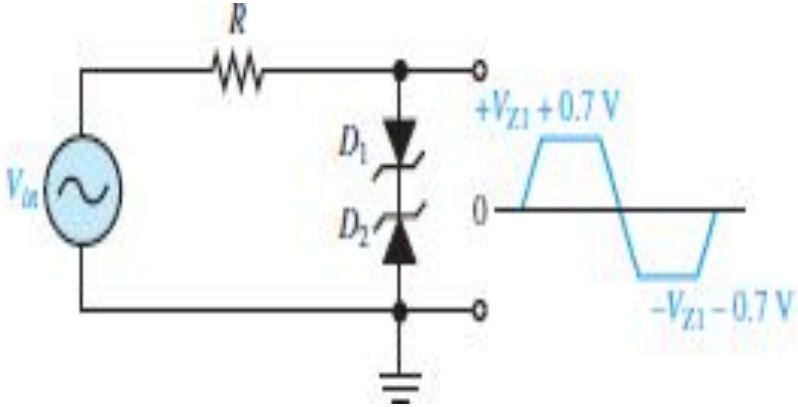

- **Figure 1** shows a zener diode used to limit the positive peak of a signal voltage to the selected zener voltage. During the negative half cycle, the zener acts as a forward-biased diode and limits the negative voltage to -0.7 V.

- When the zener diode is turned around, as shown in **Figure 2**, the negative peak is limited to the zener voltage and the positive voltage is limited to +0.7 V.

- Two back-to-back zener diodes limit both peaks to the zener voltage as shown in **Figure 3**. During the positive cycle, *D*2 is functioning as the zener limiter and *D*1 is functioning as a forward-biased diode. During the negative cycle, the roles are reversed.

Construction and Working of Light Emitting

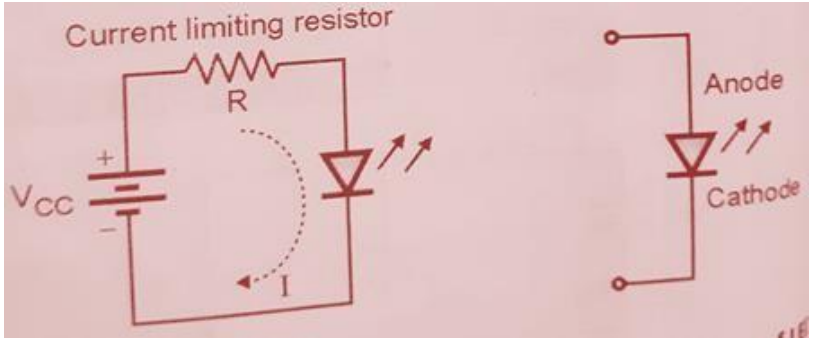

Figure 1:LED Symbol and Forward biasing of LED

LED is p-n junction diode which emits light when it is forward biased as shown in figure 1.

Figure 2: Construction of LED

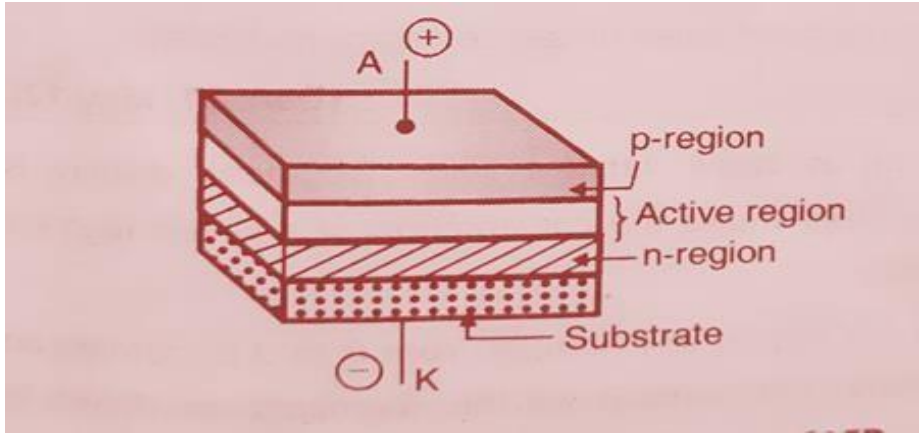

- LEDs are made up of Gallium Arsenide (GaAS), Gallium Phosphide (GaP) as they are good at emitting light
- Three semiconductor layers deposited on substrate.
- Active region exists between p & n regions and emits light in all directions

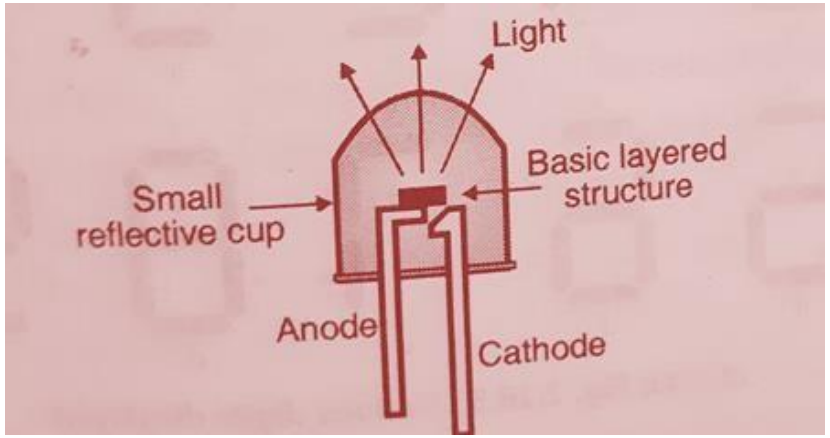

Figure 3: Cup like structure of LED

By placing a small reflective cup like structure inside basic structure the light can be focused in desired direction.

Figure 4: Working Principle of LED

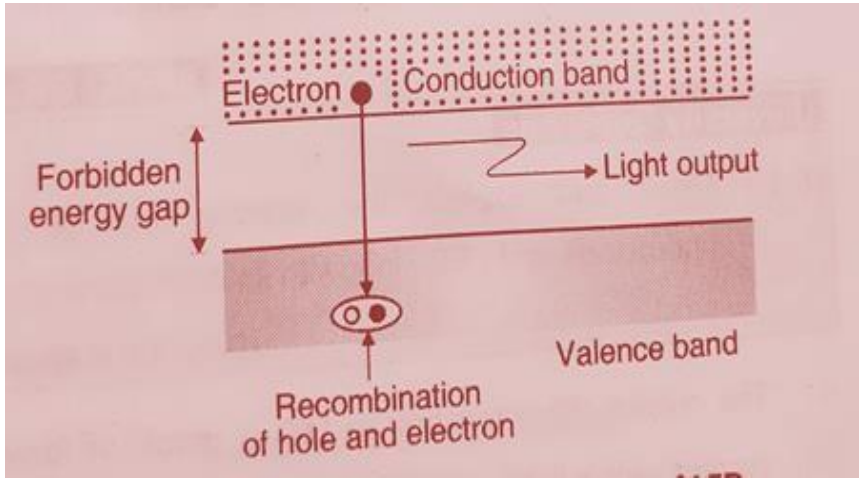

- When LED is forward biased, the electrons in the n-region will cross the junction and recombine with the holes in the p-type material.
- Recombining electrons give away energy in the form of light when they cross energy gap
- This process is called **electroluminescence. I**n this way LED emits light.

Figure 5: O/P characteristics of LED

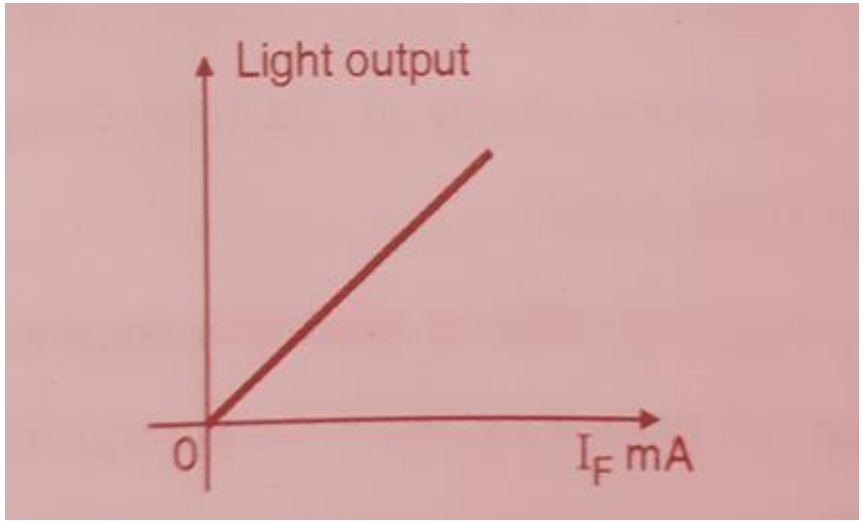

- O/P characteristics of an LED is graph of forward current vs light
- It shows that the light o/p has linear Relationship with the forward LED current

Construction and Working of Photo diode

Figure 1: Reverse biased photo diode

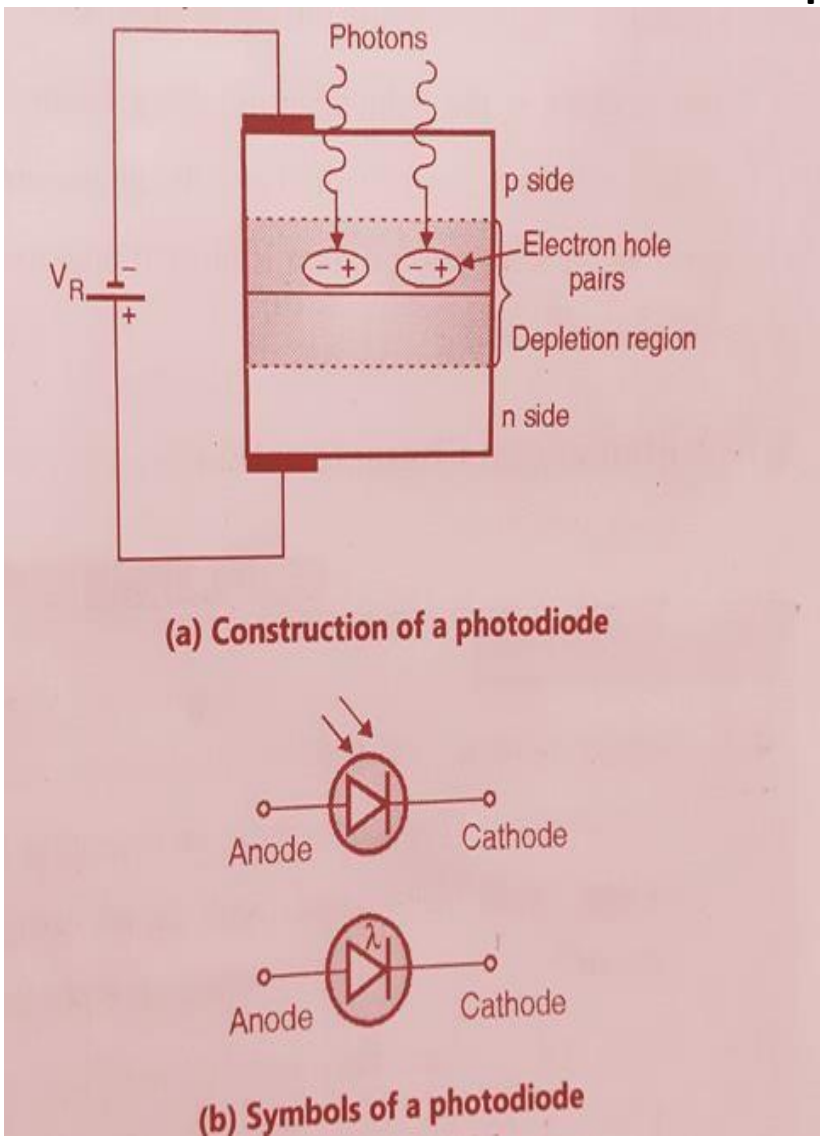

Figure 2: O/P waveforms of photo diode

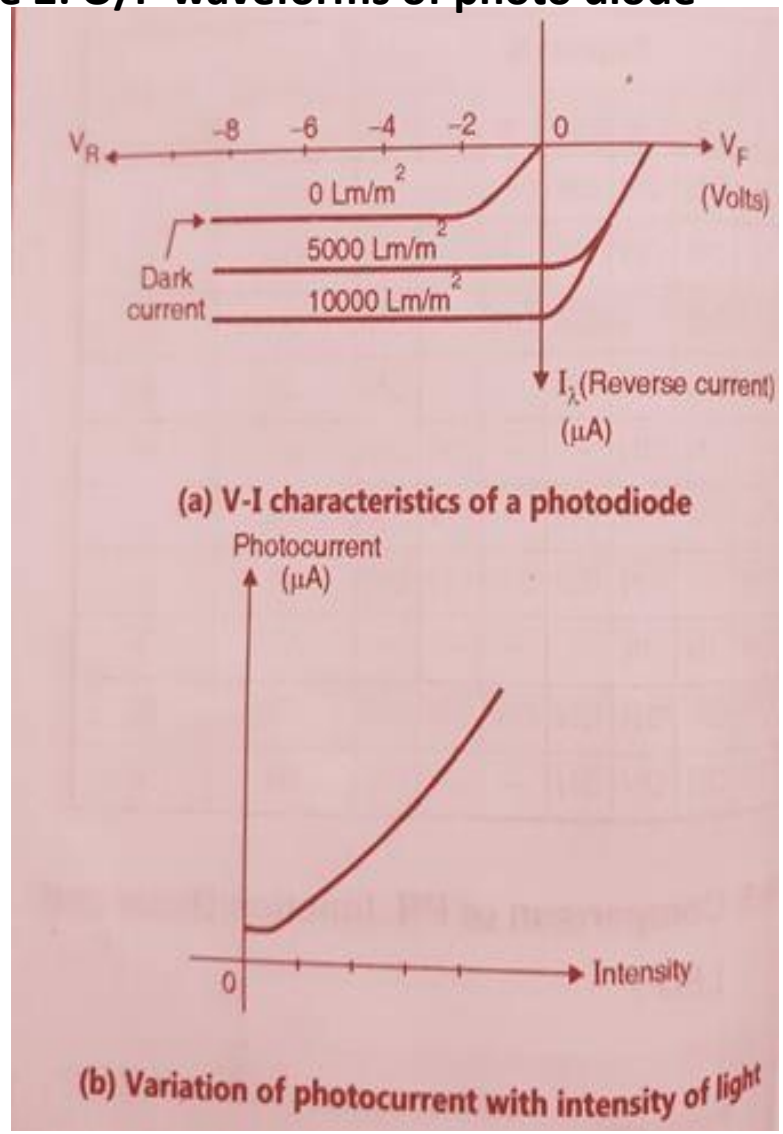

- Photo diode is a p-n junction diode which produces current proportional to the intensity of light incident on it.
- A photo diode is always operated in reverse bias therefore its depletion region is quite wide. Construction, symbol and working is as shown in Figure1
- The photons incident on the depletion region will impart their energy to the ions present there and generate electron hole pairs
- The number of electron hole pairs will depend on the intensity of light.
- These electrons and holes are attracted towards the positive and negative terminals of the external source respectively to constitute photo current.
- The photo current is proportional to the intensity of light as shown in waveform Figure 2(b)
- If no light is incident on photodiode still a small current due to thermally generated minority carriers flows through it called dark current as shown in waveform Figure2 (a)
- Photo diode is operated in reverse bias as in reverse bias in absence of light very small current flows called dark current. So photo current generated because of incident light is noticeable.
- In forward bias because of forward current which is in mA, photocurrent will not be noticeable.
- $H^{9}e^{/2}n^{4/}c^{2}e^{019}$photodiode is operated in reverse bias